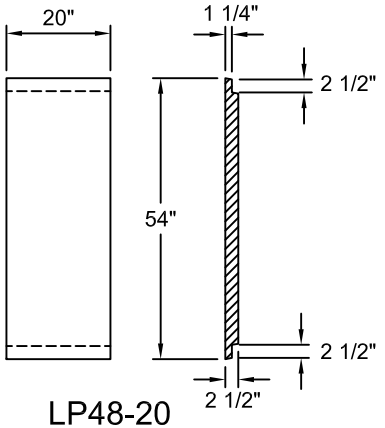

LP48-20

SCALE: 1/2" = 1'-0"

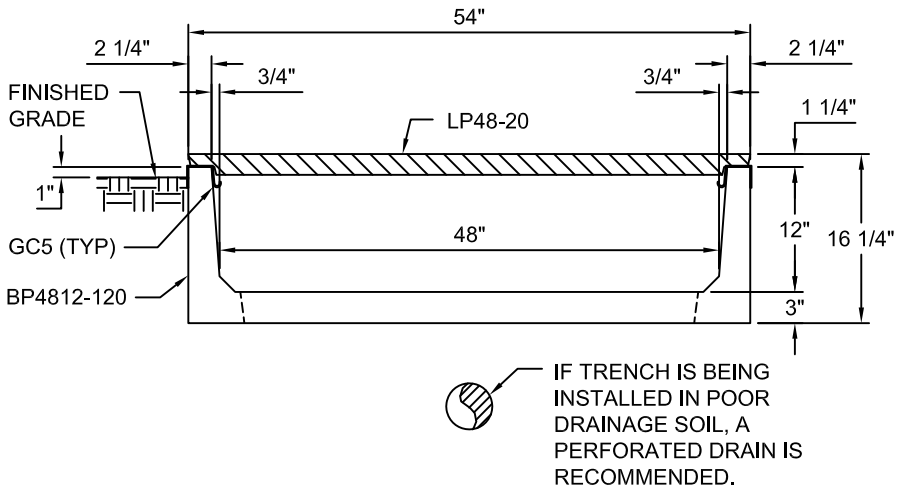

TYPICAL PEDESTRIAN SECTION

48"W x 12"D

SCALE: 1" = 1'-0"

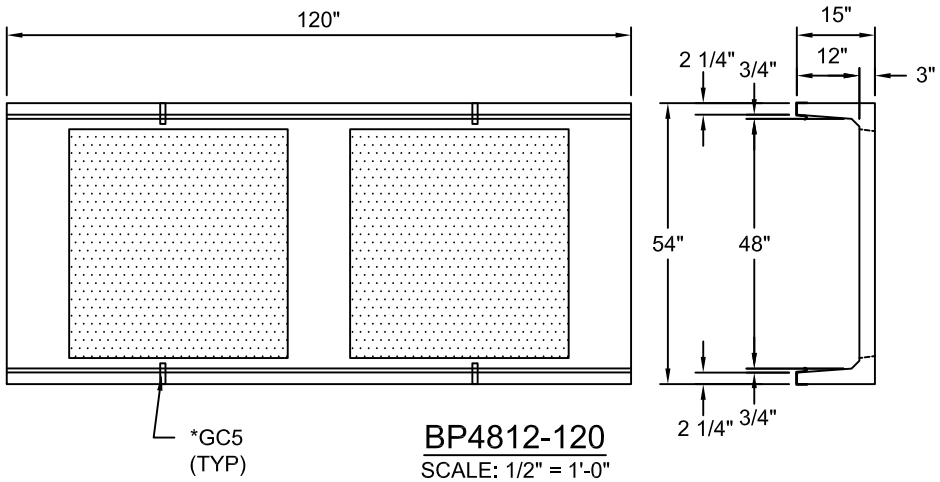

BP4812-120

SCALE: 1/2" = 1'-0"

*GC5 (GROUND CLIPS) OPTIONAL

Trenwa Inc.	
1419 ALEXANDRIA PIKE FORT THOMAS, KY 41075 859-781-0831	
TYPICAL PEDESTRIAN BASE, LID & SECTION FOR 48" WIDE x 12" DEEP TRENCH	
Date: 8/25/2008	Dwg. No. BP4812-120 STD